ITEM NO.	PART NUMBER	QTY
1	Bars	1
2	K-36-CPS-B	2
3	K-36-CPS-L	1
4	K-36-CPS-S	2
5	K-36-CPS-T	1

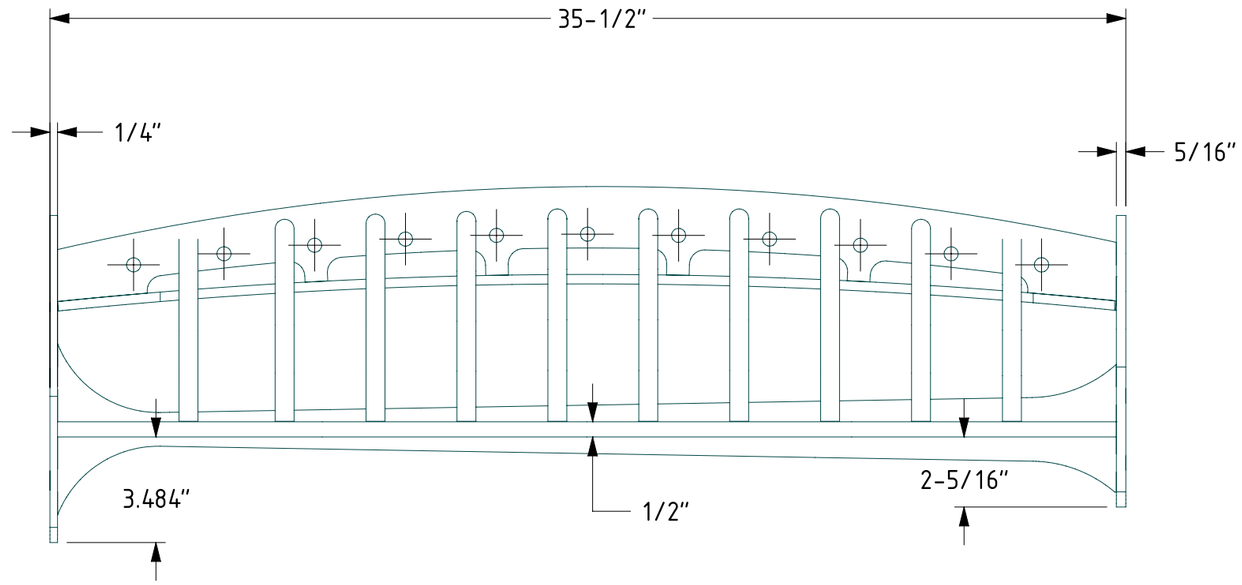

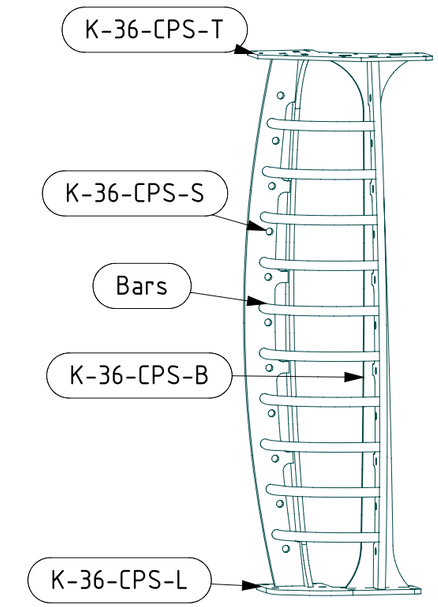

SCALE 1:10

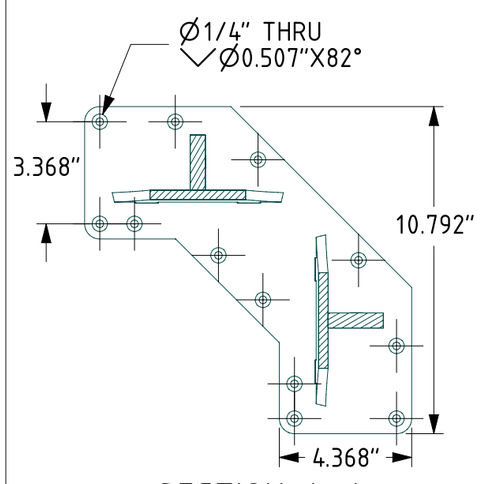

SECTION A-A

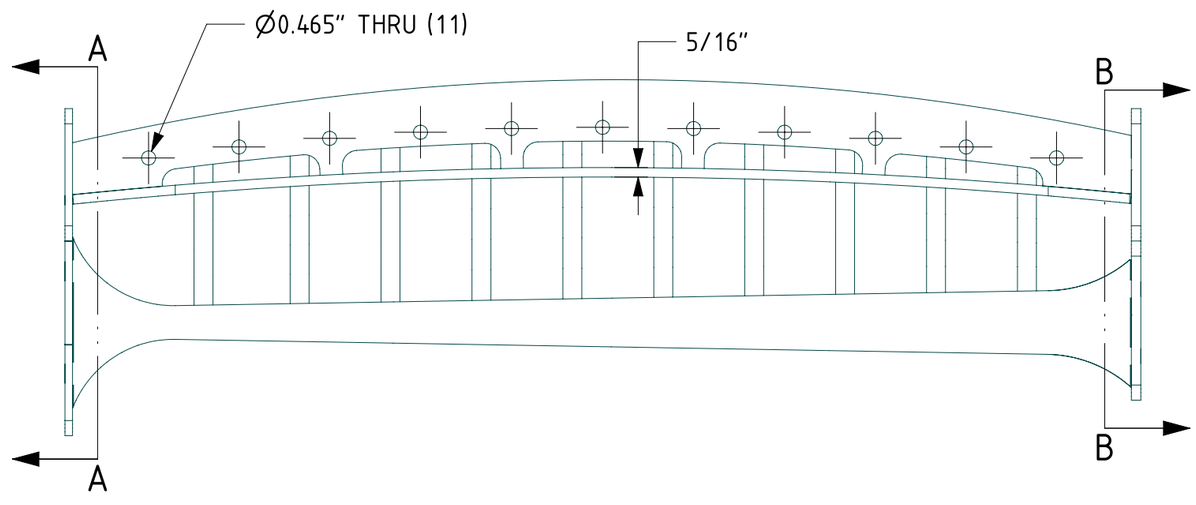

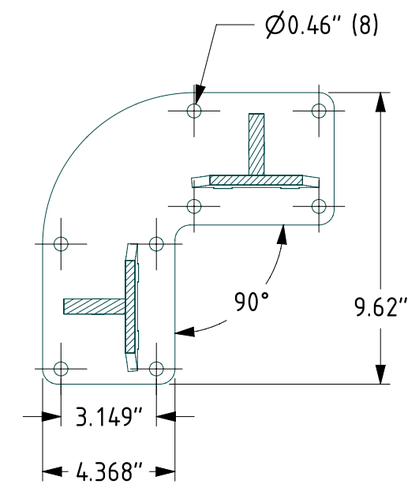

SECTION B-B

NOTES:
STANDARD MATERIAL & FINISH:
- A-36 STEEL POWDER COATED

ADDITIONAL MATERIAL OPTIONS:
- A-36 STEEL GALVINIZED
- TYPE 304 STAINLESS STEEL
- TYPE 316 STAINLESS STEEL

MATERIAL: SEE NOTE
FINISH: SEE NOTE
COLOR:
LOCATION:
QUANTITY:

KEUKA STUDIOS
FINE ARCHITECTURAL METAL WORK
1011 Rush Henrietta Townline Road
Rush, NY 14543
P 1-855-454-5678
F 585-487-6150
www.keuka-studios.com

PROJECT: K-36-CPS-OUT
PART: K-36-CPS-Out
DRAWN BY:
DATE: 3/21/13
SCALE: 1:5
SIZE: B
REVISION:
SHEET: 1 OF: 1

COPYRIGHT © 2014 BY KEUKA STUDIOS INC. ALL RIGHTS RESERVED THESE DOCUMENTS ARE THE PROPERTY OF KEUKA STUDIOS INC. NO DISTRIBUTION IS PERMITTED WITHOUT WRITTEN APPROVAL FROM KEUKA STUDIOS INC.